INSTALLATION MANUAL
CANOPY ISUZU D-MAX ALL NEW

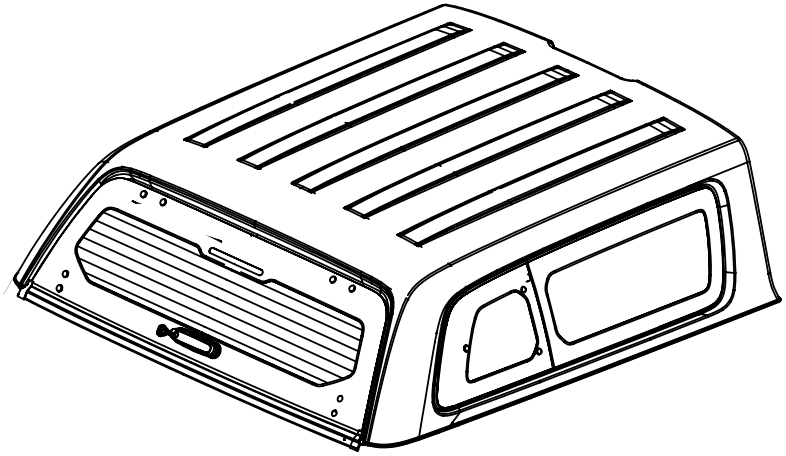

AEROKLAS CO., LTD.

62 Soi Bangna-Trad 25, Bangna-Trad Rd. Bangna, Bangkok 10260 THAILAND.
Tel: (662) 7443020 Direct Line: (662) 7443034-5 Fax: (662) 7443033
www.aeroklas.com E-mail: webinfo@aeroklas.com

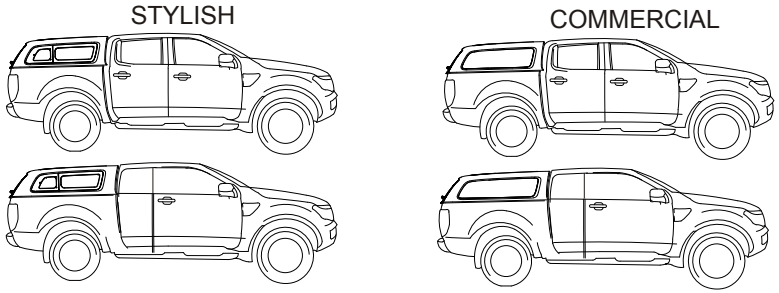

X4 X6 X6 (OPTIONAL) X3

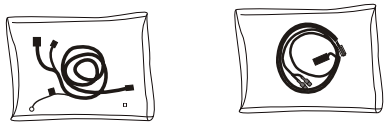

X1 X1

(OPTIONAL FOR DEMISTER)

SPECIAL TOOLS

No.10,12

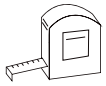

No.5

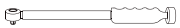

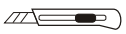

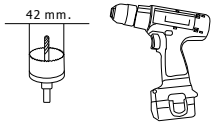

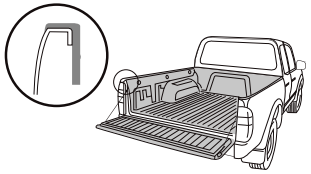

1-10

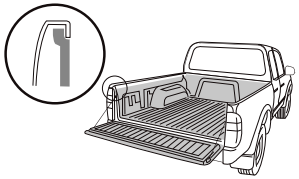

1-10

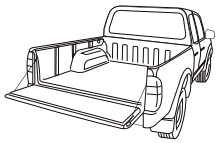

1-10

1

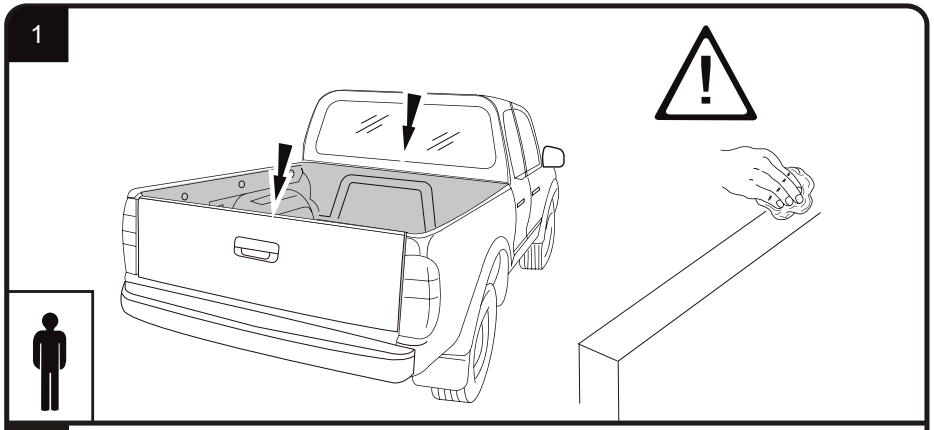

2

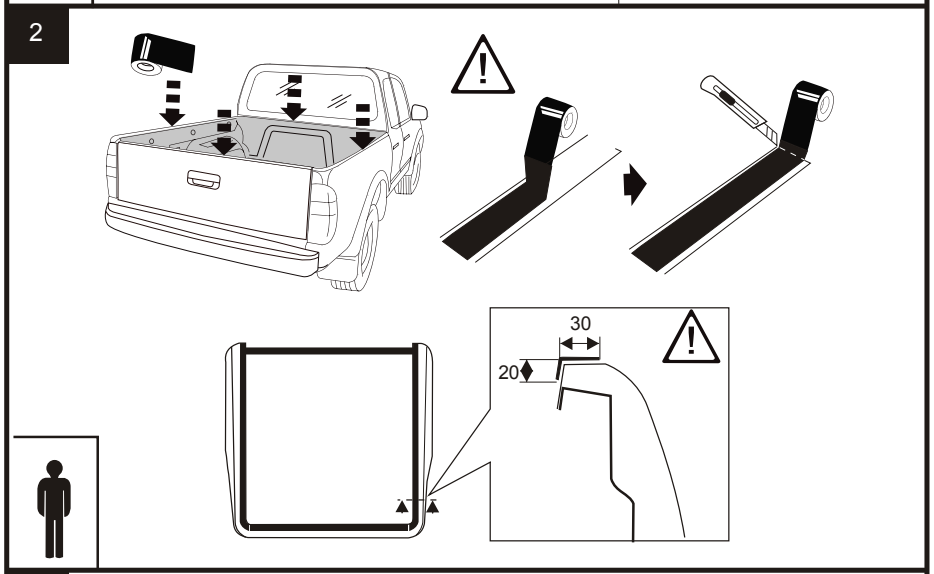
30
20

3

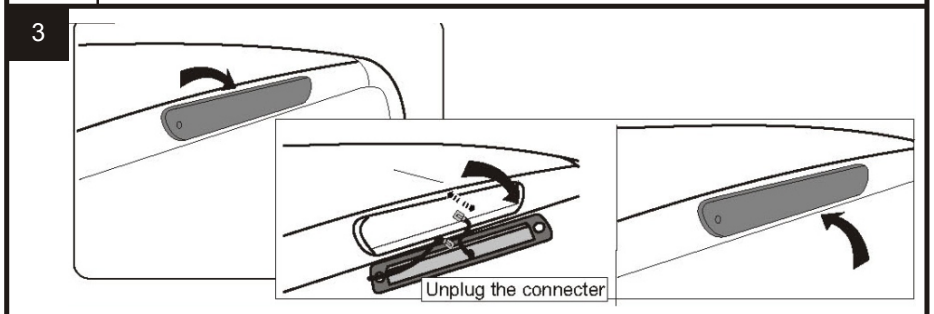
Unplug the connecter

4

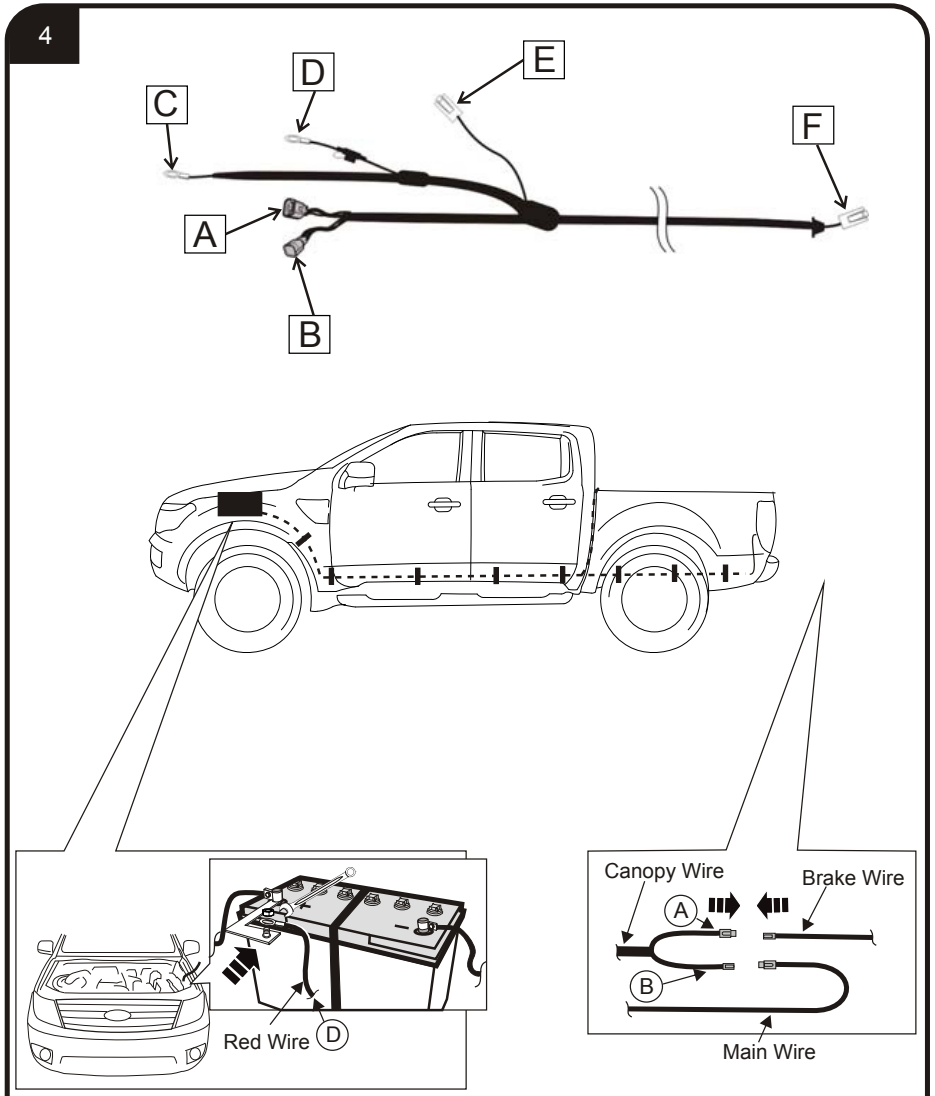
C
D
E
F
A
B
Red Wire D
Canopy Wire
Brake Wire
A
B
Main Wire

4.1

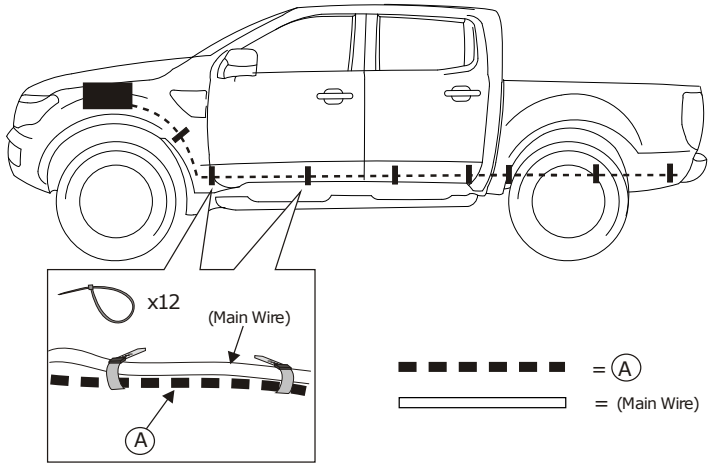

4.2

OPTIONAL FOR DEMISTOR

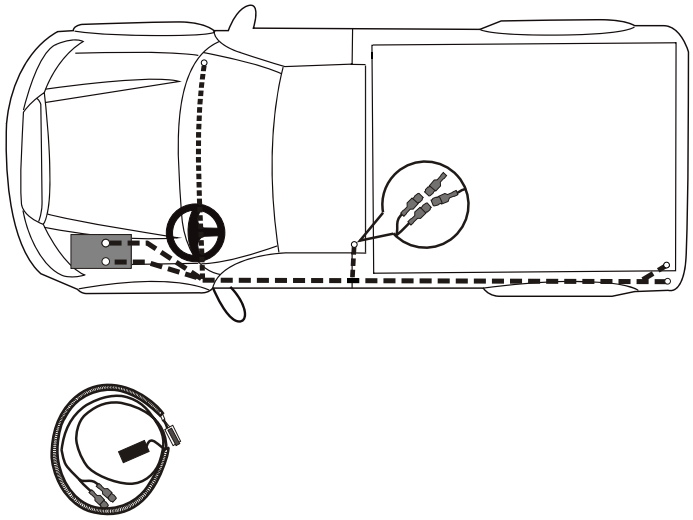

5

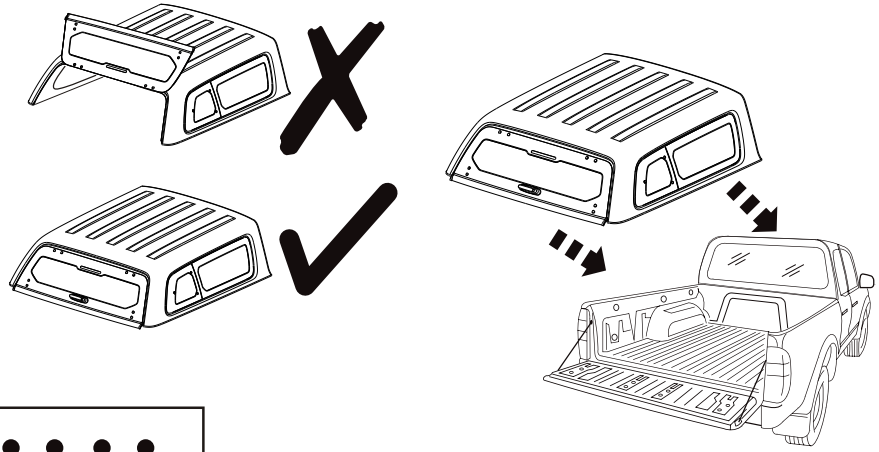

6

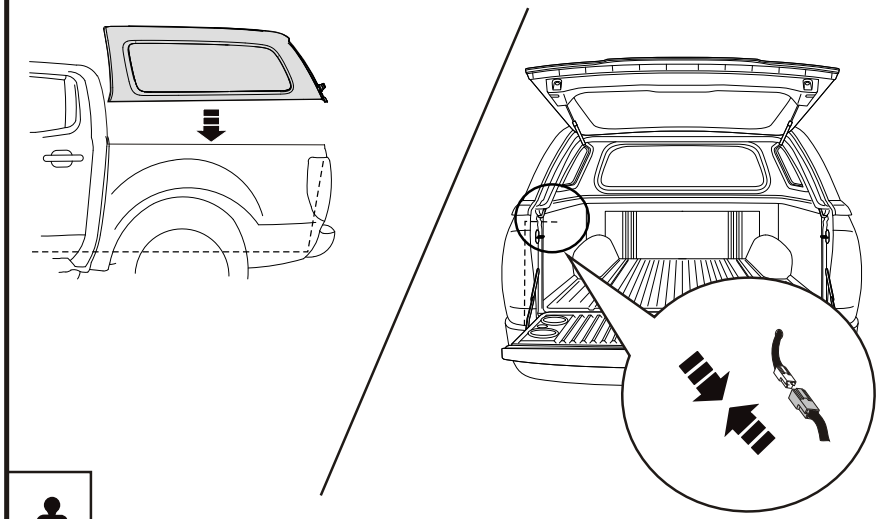

6.1

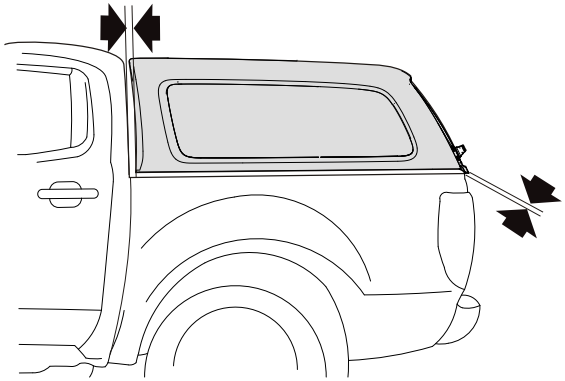

Tolerance ≤ 10 mm.

6.2

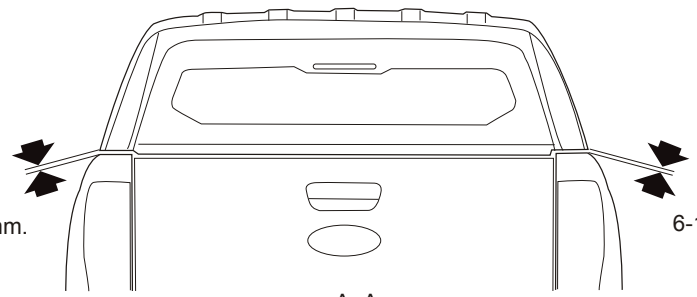

7

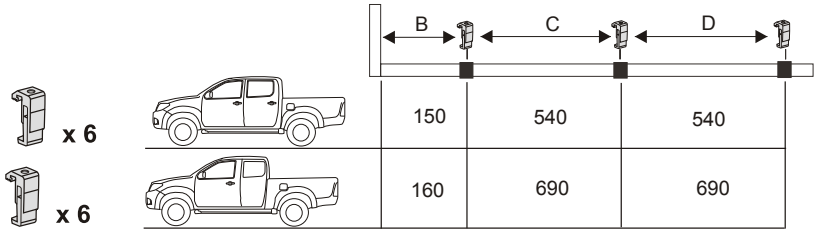

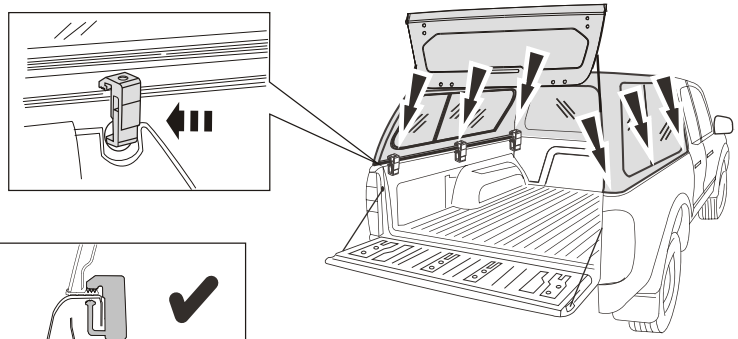

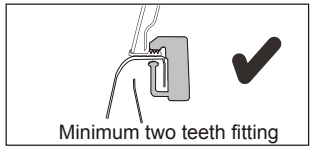

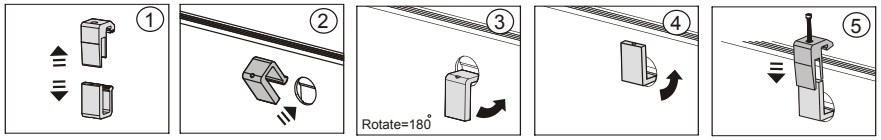

8

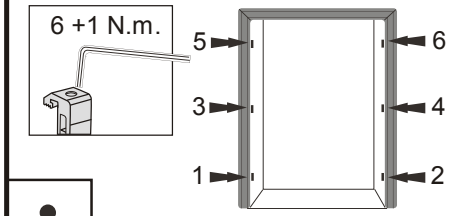

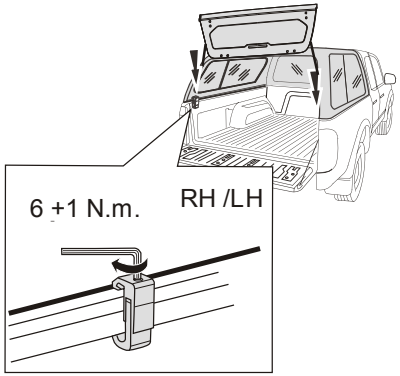

9

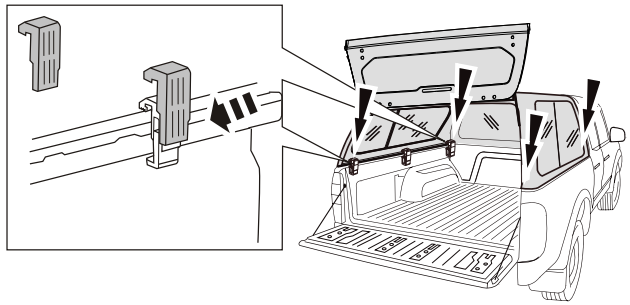

10

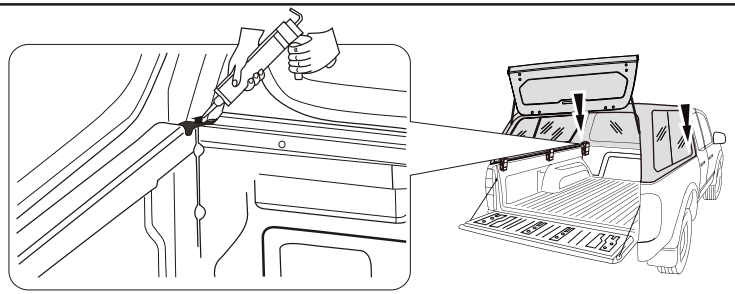

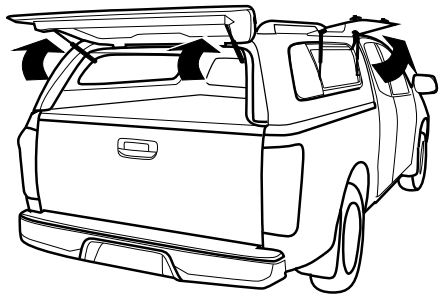

Do not open win

Wiring diagram for ISUZU d-max all new

Power electric wires

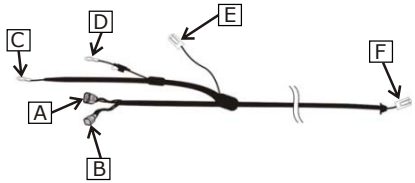

Demister (Optional)

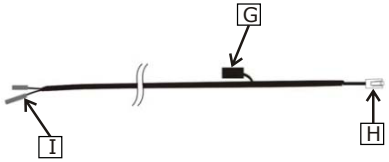

Point	Photo	Function	Referancemaual
A		Connect to Rear tail lamp	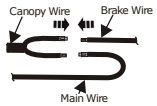
B		Connect to Rear tail lamp	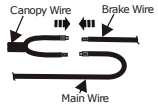
C		Connect to Battery cathode	
D		Connect to Battery anode	
E		Connectto Demister(H) (Optional)	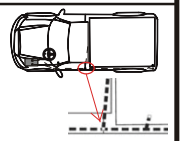
F		Connect to canopy	
G		Relay & Fuse	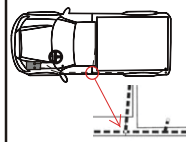
H		Connect to power Electricwires(E)	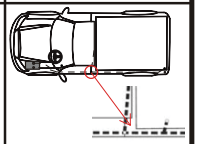
I		Connectto Vehiclerear glass demister	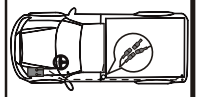

AEROKLAS

Remote Keyless Entry
ISUZU Dmax RT50

Important

Always refer to the vehicle's Workshop Manual when removing vehicle components.

- Note down all clock and radio settings.
- In the engine bay, disconnect the negative battery terminal **(1)**.

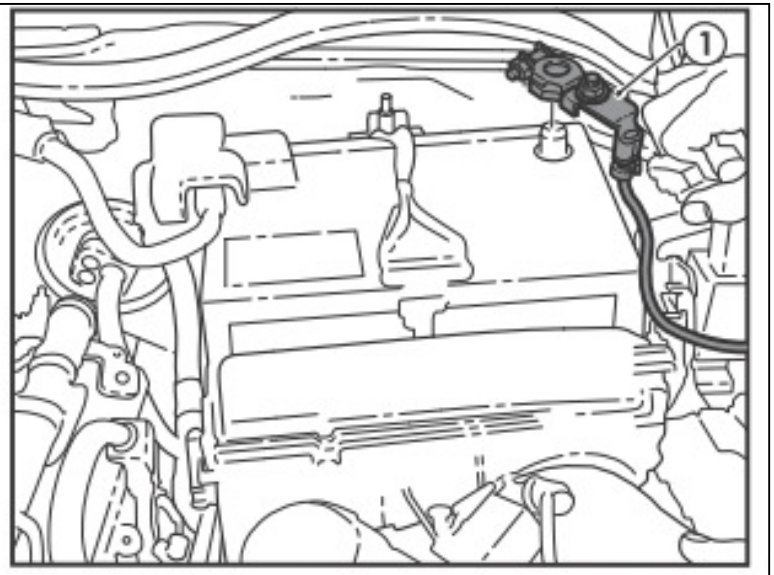

On RT50 D-Max, remove the RHS kick panel under the glove box.

Locate RHS door inline connector as shown

2) Remove the mounting bolt on the connector interface

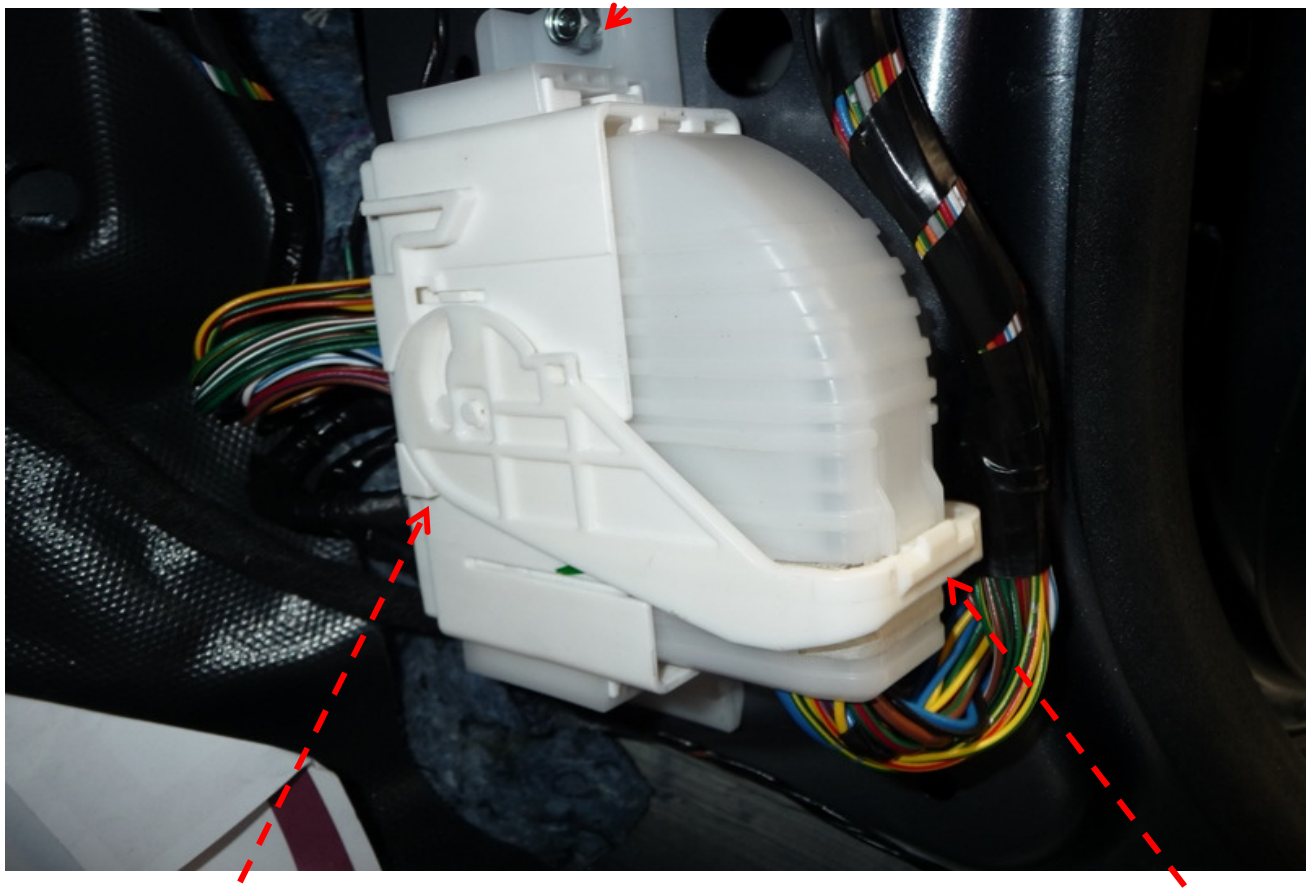

Once disconnected, turn over the connector interface to access the required circuits.

1) Remove the connector leaver lock and disconnect from the interface.

Locate the BL wire (top corner cavity) on the green connector for door “UNLOCK” signal.
Using the scotch lock one the RKE cabin Harness, connect “UNLOCK” (BL/BK wire) as show.

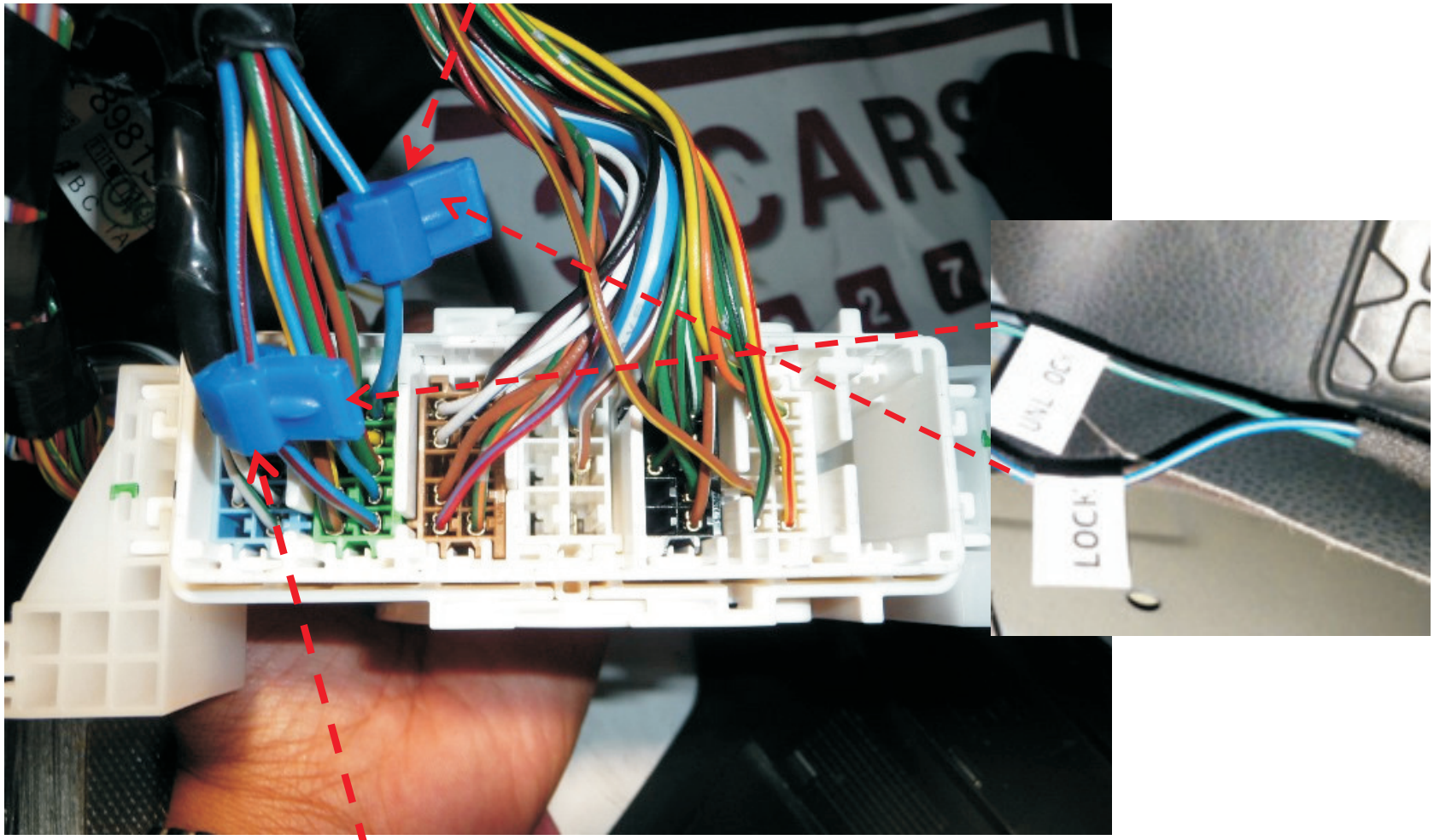

Locate the BL/RD wire (bottom corner cavity) on the green connector for door “LOCK” signal.
Using the scotch lock one the RKE cabin Harness, connect “UNLOCK” (GN/BK wire) as show.